Nov 20, 2026

SPIGOT REDUCER LONG SDR11

#PS2323



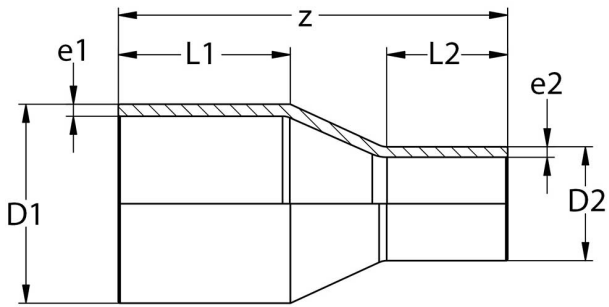

Body Material: PE100

Standards: EN 1555, EN 12201, UK Water Reg4

Family Products

Product Code	D1mm	L1mm	L2	Gas Pressure Rating	Suitable Pipes	Weightkg
PS2323080715	32	44	37	PE100 SDR 11	SDR 11	0.020
PS2323090635	40	45	36	PE100 SDR 11	SDR 11	0.030
PS2323090715	40	47	35	PE100 SDR 11	SDR 11	0.032
PS2323090815	40	50	39	PE100 SDR 11	SDR 11	0.036
PS2323100715	50	62	47	PE100 SDR 11	SDR 11	0.060
PS2323100815	50	61	50	PE100 SDR 11	SDR 11	0.066
PS2323100915	50	61	55	PE100 SDR 11	SDR 11	0.075
PS2323110735	63	64	47	PE100 SDR 11	SDR 11	0.090
PS2323110815	63	69	50	PE100 SDR 11	SDR 11	0.11
PS2323110915	63	69	55	PE100 SDR 11	SDR 11	0.12
PS2323111015	63	69	61	PE100 SDR 11	SDR 11	0.14
PS2323120915	75	76	55	PE100 SDR 11	SDR 11	0.20
PS2323121015	75	76	61	PE100 SDR 11	SDR 11	0.14

Product Code	D1mm	L1mm	L2	Gas Pressure Rating	Suitable Pipes	Weightkg
PS2323121115	75	76	69	PE100 SDR 11	SDR 11	0.22
PS2323131015	90	85	61	PE100 SDR 11	SDR 11	0.27
PS2323131115	90	85	69	PE100 SDR 11	SDR 11	0.30
PS2323131215	90	85	76	PE100 SDR 11	SDR 11	0.34
PS2323141035	110	88	61	PE100 SDR 11	SDR 11	0.39
PS2323141115	110	95	69	PE100 SDR 11	SDR 11	0.49
PS2323141215	110	95	76	PE100 SDR 11	SDR 11	0.49
PS2323141315	110	95	85	PE100 SDR 11	SDR 11	0.58
PS2323151115	125	99	69	PE100 SDR 11	SDR 11	0.63
PS2323151215	125	100	76	PE100 SDR 11	SDR 11	0.67
PS2323151315	125	100	85	PE100 SDR 11	SDR 11	0.72
PS2323151415	125	100	80	PE100 SDR 11	SDR 11	0.82
PS2323161215	140	116	72	PE100 SDR 11	SDR 11	0.85
PS2323161315	140	116	85	PE100 SDR 11	SDR 11	0.92

Product Code	D1mm	L1mm	L2	Gas Pressure Rating	Suitable Pipes	Weightkg
PS2323161415	140	105	95	PE100 SDR 11	SDR 11	1.04
PS2323161515	140	105	105	PE100 SDR 11	SDR 11	1.17
PS2323171315	160	111	84	PE100 SDR 11	SDR 11	1.20
PS2323171415	160	112	94	PE100 SDR 11	SDR 11	1.34
PS2323171515	160	111	98	PE100 SDR 11	SDR 11	1.42
PS2323171615	160	111	105	PE100 SDR 11	SDR 11	1.57
PS2323181335	180	110	90	PE100 SDR 11	SDR 11	1.41
PS2323181415	180	115	95	PE100 SDR 11	SDR 11	1.60
PS2323181515	180	116	105	PE100 SDR 11	SDR 11	1.77
PS2323181635	180	105	96	PE100 SDR 11	SDR 11	1.61
PS2323181715	180	117	110	PE100 SDR 11	SDR 11	2.07
PS2323191435	200	126	96	PE100 SDR 11	SDR 11	1.90
PS2323191515	200	124	110	PE100 SDR 11	SDR 11	2.21
PS2323191715	200	124	110	PE100 SDR 11	SDR 11	2.44

Product Code	D1mm	L1mm	L2	Gas Pressure Rating	Suitable Pipes	Weightkg
PS2323191835	200	117	109	PE100 SDR 11	SDR 11	2.30
PS2323201335	225	130	90	PE100 SDR 11	SDR 11	2.52
PS2323201415	225	132	90	PE100 SDR 11	SDR 11	2.91
PS2323201535	225	130	100	PE100 SDR 11	SDR 11	2.81
PS2323201715	225	132	110	PE100 SDR 11	SDR 11	3.02
PS2323201815	225	140	115	PE100 SDR 11	SDR 11	3.50
PS2323201935	225	132	130	PE100 SDR 11	SDR 11	3.47
PS2323211715	250	140	110	PE100 SDR 11	SDR 11	4.15
PS2323211815	250	140	120	PE100 SDR 11	SDR 11	4.32
PS2323211915	250	140	125	PE100 SDR 11	SDR 11	4.65
PS2323212015	250	140	125	PE100 SDR 11	SDR 11	5.09
PS2323221815	280	150	120	PE100 SDR 11	SDR 11	5.49
PS2323221915	280	150	125	PE100 SDR 11	SDR 11	5.81
PS2323222015	280	150	132	PE100 SDR 11	SDR 11	6.16

Product Code	D1mm	L1mm	L2	Gas Pressure Rating	Suitable Pipes	Weightkg
PS2323222115	280	150	145	PE100 SDR 11	SDR 11	6.70
PS2323232015	315	160	142	PE100 SDR 11	SDR 11	7.78
PS2323232115	315	160	145	PE100 SDR 11	SDR 11	8.33
PS2323232215	315	160	157	PE100 SDR 11	SDR 11	9.09
PS2323242115	355	175	145	PE100 SDR 11	SDR 11	10.9
PS2323242215	355	170	155	PE100 SDR 11	SDR 11	11.7
PS2323242315	355	175	170	PE100 SDR 11	SDR 11	12.7
PS2323252215	400	190	155	PE100 SDR 11	SDR 11	14.8
PS2323252315	400	190	165	PE100 SDR 11	SDR 11	15.6
PS2323252415	400	190	185	PE100 SDR 11	SDR 11	17.0
PS2323262315	450	202	157	PE100 SDR 11	SDR 11	19.5
PS2323262415	450	202	172	PE100 SDR 11	SDR 11	20.9
PS2323262515	450	202	187	PE100 SDR 11	SDR 11	22.8
PS2323272415	500	222	172	PE100 SDR 11	SDR 11	28.5

Product Code	D1mm	L1mm	L2	Gas Pressure Rating	Suitable Pipes	Weightkg
PS2323272515	500	222	187	PE100 SDR 11	SDR 11	29.0
PS2323272615	500	222	202	PE100 SDR 11	SDR 11	32.5
PS2323292415	630	265	172	PE100 SDR 11	SDR 11	49.3
PS2323292515	630	265	187	PE100 SDR 11	SDR 11	51.0
PS2323292615	630	265	202	PE100 SDR 11	SDR 11	53.7
PS2323292715	630	265	650	PE100 SDR 11	SDR 11	56.6